WATERSTAGE

Document n° 1541-1 ~ 24/04/2012

FR NL EN DE IT

Cooling kit

UTW-KCL*D

(Compatible with high-flow circulation pump, code UTW-PHF*D)

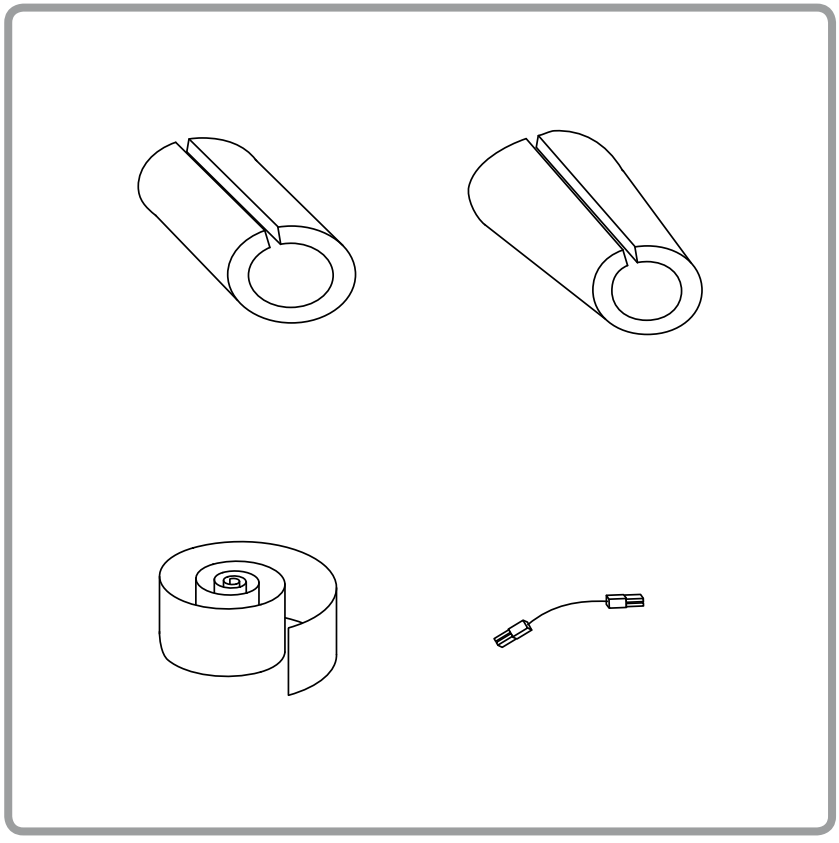

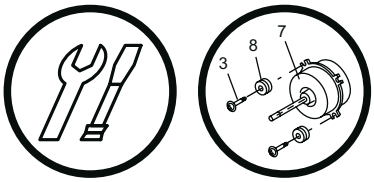

Installation instructions

intended for the professional technician

these must be kept safe for subsequent consultation

Fujitsu General (Euro) GmbH
Werftstrasse 20
40549 Düsseldorf - Germany

Subject to modifications without notice.
Non contractual document.

- ☞ **It is strictly forbidden to use a radiator circuit in cooling mode.**
- ☞ **Damp rooms (kitchens, bathrooms) must be equipped with automatic valves preventing water from passing into the corresponding floor circuit in cooling mode.**
- ☞ **Before switching on the heating-cooling circuit in the floor, check that the floor's construction and coverings are compatible with cooling mode.**

Nominal cooling performances

Designation Model		**Waterstage High Power**	**11 Single phase**	**14 Single phase**	**11 3-Phase**	**14 3-Phase**	**16 3-Phase**
Cool output							
+35°C / +18°C - Cooling floor system	kW	9,80	12,50	9,80	12,5	13,50	
+35°C / +7°C - Fan convector	kW	8,50	9,00	8,50	9,00	9,50	
Power absorbed							
+35°C / +18°C - Cooling floor system	kW	2,38	3,38	2,57	3,61	4,14	
+35°C / +7°C - Fan convector	kW	3,11	3,34	3,41	3,66	3,99	
Cooling Efficiency (EER)							
+35°C / +18°C - Cooling floor system		4,12	3,70	3,82	3,46	3,26	
+35°C / +7°C - Fan convector		2,73	2,69	2,50	2,46	2,38	

1 Assembly and connections

1.1 Scope of application

The cooling kit can be used with the following configurations 1, 2, 3 or 4.

Remarks and Recommendations:

The production of DHW takes priority over cooling. If the installation is fitted with a DHW tank, set the parameter 907 to "Time program 5 / Cooling", then set the time slots to only activate cooling during the day and for the DHW to operate during the night (parameters 600 to 616).

After a DHW load, the heat pump shifts to the cooling mode after 7 minutes.

If the installation consists of 2 heating circuits, the floor heating and cooling systems should be placed on a mixed circuit

Cooling EXCLUSIVELY takes place on the mixed circuit if it is only programmed on one of the 2 circuits.

Only the room sensor of the circuit 1 influences the regulation in the cooling mode.

1.2 Thermal insulation

Install the thermal insulation kit on the metal parts to avoid the inconvenient effects of condensation.

- **1** - Install **the straight insulating sleeves** on the exchanger's heating fittings.
- **2** - Install **the conical insulating sleeves** on the exchanger's refrigeration fittings.
- **3** - Place the insulating adhesive tape on all the piping fittings (connection kit and/or 2-circuit included).

☞ **Warning**

Proceed to insulate the gas and liquid pipes to avoid any condensation:

Use pipe insulators resistant to temperatures over 90°C. In addition if the humidity level in areas where the refrigeration pipes are installed is expected to exceed 70%, protect the pipes with pipe insulators. Use an insulating material thicker than 15mm if the humidity level is 70~80%, and an insulating material thicker than 20mm if the humidity exceeds 80%. If the recommended thicknesses are not observed under the conditions described above, condensation will form on the surface of the insulation material. Lastly, take care to use pipe insulators whose thermal conductivity is 0.045 W/mK or less when the temperature is 20°C. The insulation must be impermeable to resist the passage of steam during the defrosting cycles (fibreglass wool is prohibited).

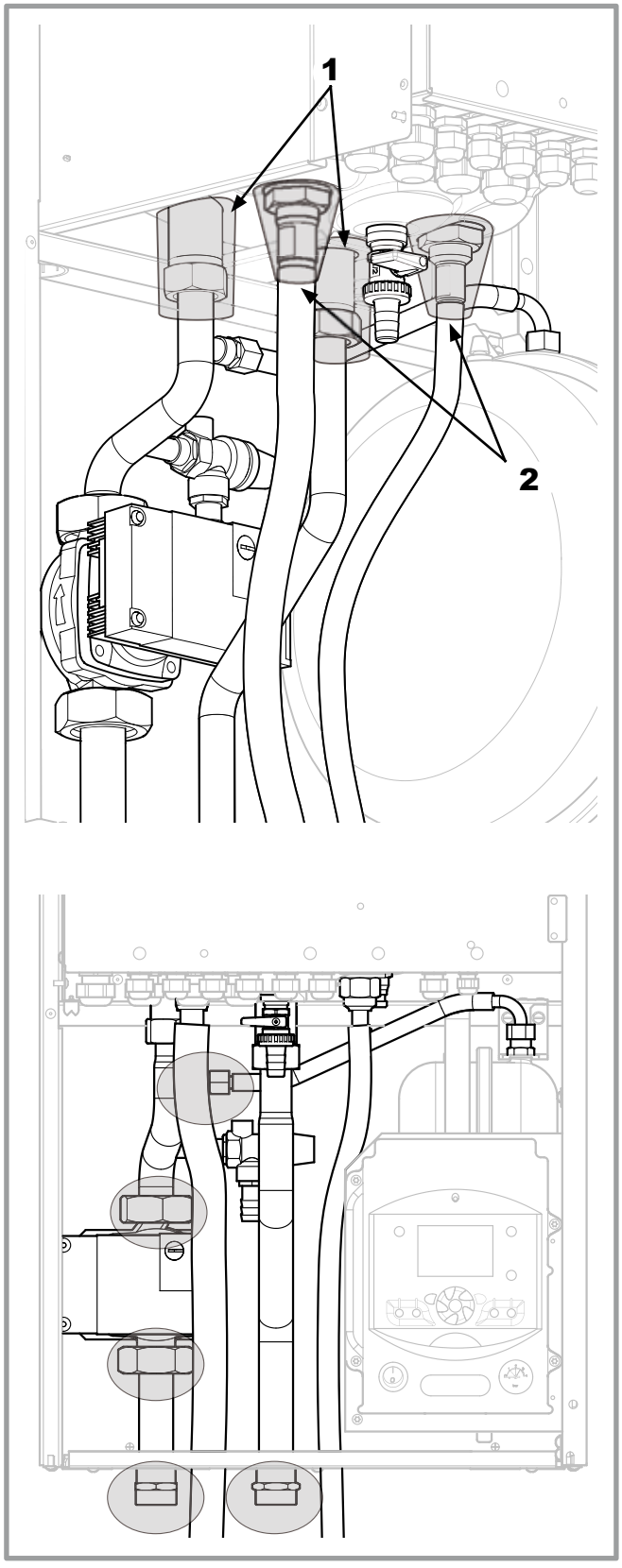

figure 1 - Thermal insulation
(Heat pump Split single service)

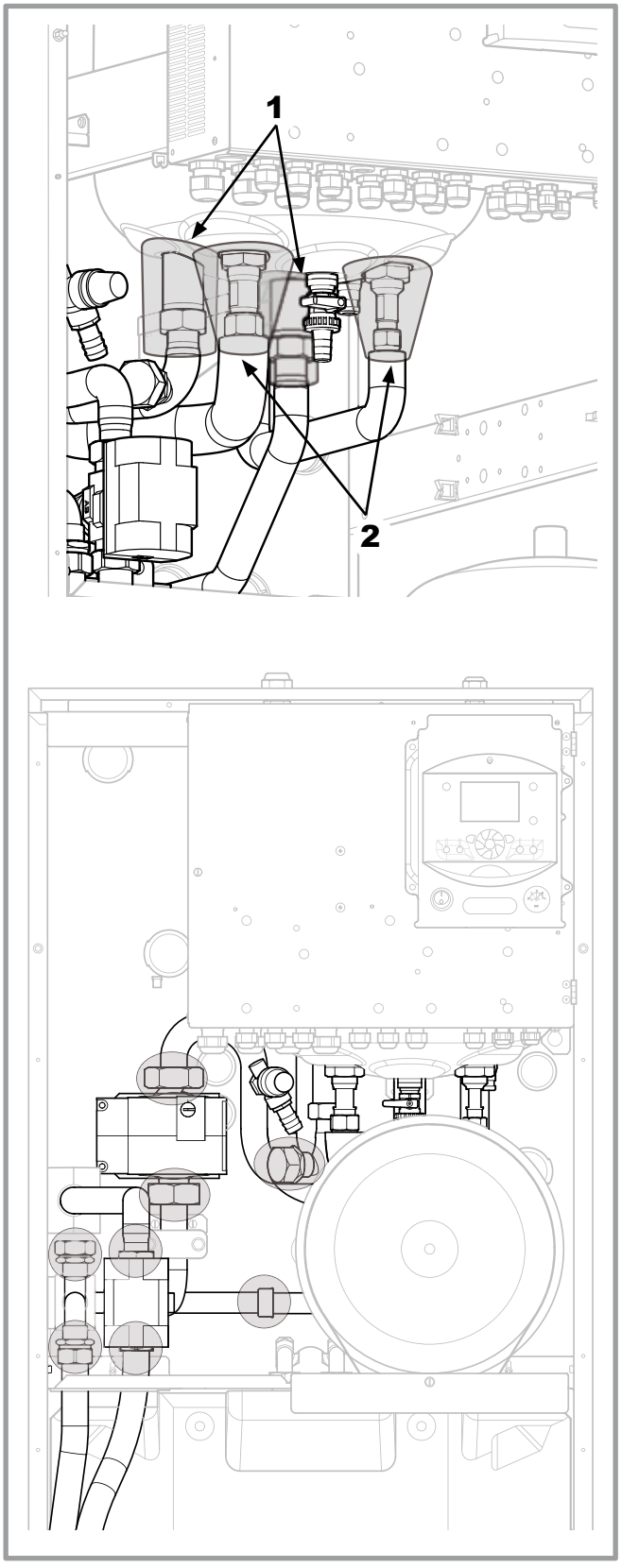

figure 2 - Thermal insulation
(Heat pump Split 2 services)

1.3 Connection bundle

Plug the supplied cable to the terminals of the interface bundle connected in **X75**.

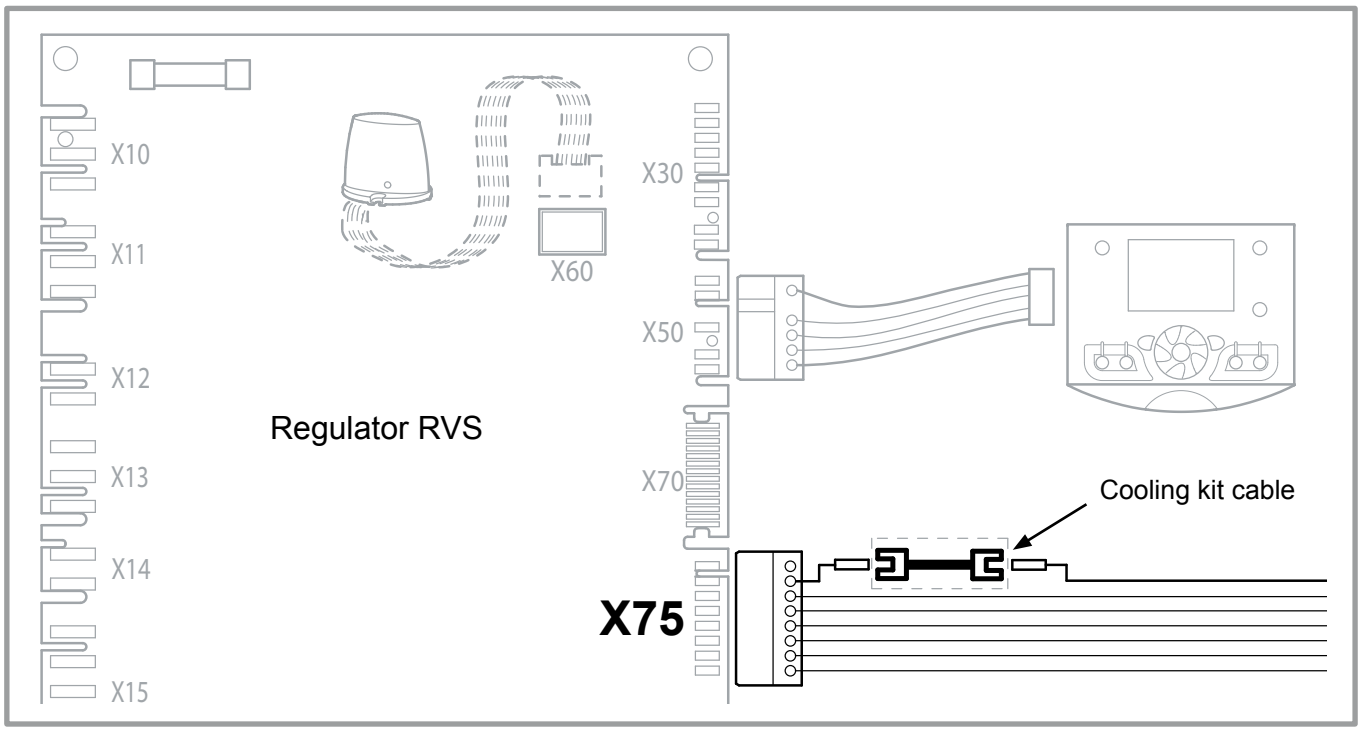

figure 3 - Connection bundle

1.4 Parametering the setting

1.4.1 General

Only the parameters accessible to levels:

U End user

I Commissioning level

S Engineer level

Are described in this document.

The access levels are specified in the second column of the table by means of the letters **U**, **I** and **S**.

The OEM parameters are not described and require a manufacturer's access code.

1.4.2 Setting parameters

- Choose the desired level.
- Scroll the menu list.
- Choose the desired menu.
- Scroll the function lines.
- Choose the desired line.
- Adjust the parameter.
- Check the setting by pressing **OK**.
- To return the menu, press **ESC**.

If no setting is made for 8 minutes, the screen returns automatically to the basic display.

1.4.3 List of function lines

Line		*Function*	*Setting range or display*	*Setting increment*	*Basic setting*
Time program 5 / Cooling					
600	**U**	Pre-selection (day / week)	Mon-Sun Mon-Fri Sat-Sun Monday Tuesday…		**Mon-Sun**
601	**U**	1st phase On (start)	00:00... --:--	10 min	**8:00**
602	**U**	1st phase Off (end)	00:00... --:--	10 min	**20:00**
603	**U**	2nd phase On (start)	00:00... --:--	10 min	**--:--**
604	**U**	2nd phase Off (end)	00:00... --:--	10 min	**--:--**
605	**U**	3rd phase On (start)	00:00... --:--	10 min	**--:--**
606	**U**	3rd phase Off (end)	00:00... --:--	10 min	**--:--**
616	**U**	Default values	No, yes		**No**
		Yes + OK = The default values memorised in the regulator replace and cancel the customised heating programmes. Your customised settings are therefore lost.			
Cooling circuit 1					
901	**U**	Operating mode	Deactivated, Automatic		**Deactivated**
902	**U**	Nominal ambient temperature setpoint	17... 40 °C	0,5 °C	**24 °C**
907	**U**	Release	24h/day , Time programs HC1, Time program 5 / Cooling		**Time program 5 / Cooling**
		Recommendations: If the installation is fitted with a DHW tank. Set the parameter 907 to "Time program 5 / Cooling" (to activate cooling during the day only and to let the DHW operate at night).			
908	**I**	Flow temp setp at OT° 25°C	6... 35 °C	0,5 °C	**20 °C**
		Starting cooling temperature setting for an outdoor temperature of 25 °C.			
909	**I**	Flow temp setp at OT° 35°C	6... 35 °C	0,5 °C	**16 °C**
		Starting cooling temperature setting for an outdoor temperature of 35 °C.			

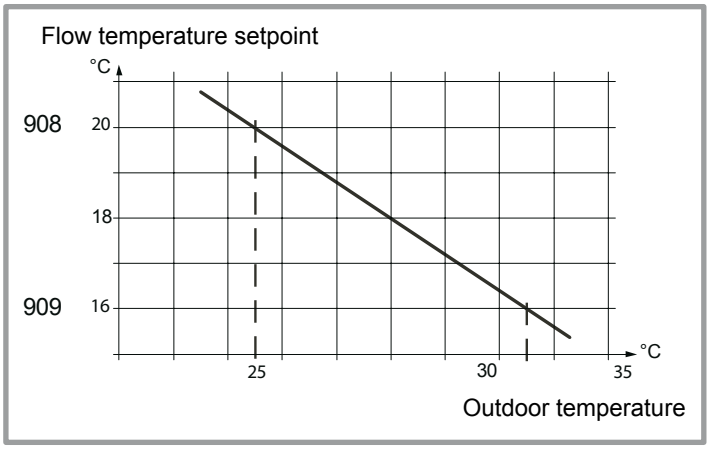

figure 5 -
Slope of the Cooling curve

Line		Function	Setting range or display	Setting increment	Basic setting
912	I	Cooling limit at T° ex mixed (8704)	--, 8... 35 °C	0,5 °C	**24 °C**
		If the mixed outside temperature is below this value, the cooling mode is disabled.			
913	S	Lock time at end of heating	--, 8... 100	1 h	**24 h**
		The time delay for operating in cooling mode after having operated in heating mode and vice versa.			
918	S	Summer comp start at OT°	20... 50 °C	1 °C	**26 °C**
		The comfort setting (902) is increased in line with the outdoor temperature rising above this reading.			
919	S	Summer comp end at OT°	20... 50 °C	1 °C	**40 °C**
		Above this reading, the comfort setting (902) is no longer affected by an increase in the outdoor temperature.			
920	S	Summer comp setp increase	--, 1... 10 °C	1 °C	**4 °C**
		Maximum increase in the comfort setting (902).			

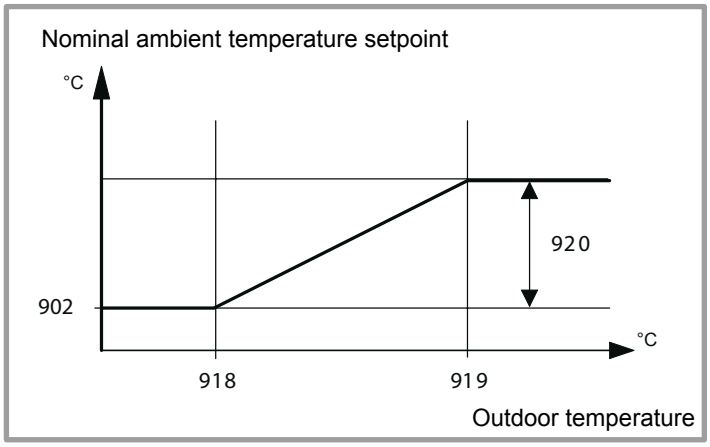

figure 4 -
Compensation for the comfort setting

In summer, the comfort setting for cooling (Line 902) is offset upwards in line with the increase in outdoor temperature.

The saves on cooling power and prevents too great a differential between the ambient indoor and outdoor temperatures.

Remark: Summer compensation explains the difference between the value set on Line 902 (or on the setting knob) and the reading on line 8740.

923	S	Flow temp setp min OT° 25°C	6... 35 °C	0,5 °C	**18 °C**
		The lowest starting temperature for cooling for an outdoor temperature of 25 °C.			
924	S	Flow temp setp min OT° 35°C	6... 35 °C	0,5 °C	**18 °C**
		The lowest starting temperature for cooling for an outdoor temperature of 35 °C.			

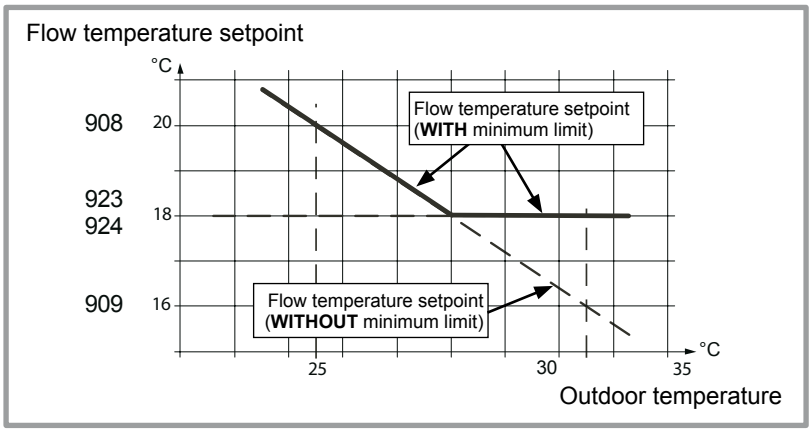

figure 6 -
Limitations on the starting temperature setting

Line		Function	Setting range or display	Setting increment	Basic setting
928	I	Room influence	--, 1... 100 %	1 %	**80 %**
		If the installation is fitted with an room sensor: This function enables you to choose the ambient temperature's influence on the setting. If no value is entered, the setting is made based on the outdoor temperature. If the parameter is set at 100%, the setting is only based on the ambient temperature.			
932	S	Room temp limitation	--, 0,5... 4 °C	0,5 °C	**0,5 °C**
938	S	Mixing valve decrease	0... 20 °C	1 °C	**0 °C**
941	S	Actuator running time	30... 873 s	1 s	**240 s**
945	S	Mixing valve in heating mode	Control, Open		**Control**
963	S	With prim contr/system pump	No, yes		**No***
		* Basic setting: 1 circuit = No: 2 circuits = See table page 10.			
Installation configuration					
5700	I	Pre-setting	1,2,3,... 12	1	**1**
		This control enables you to choose one of the 8 pre-selected installation configurations (The hydraulic layouts for the various configurations are detailed in the section: ""Installation Configurations). - Pre-setting 1 : 1 heating circuit with or without DHW. - Pre-setting 2 : 2 heating circuits with or without DHW. - Pre-setting 3 : Boiler connection, 1 heating circuit with or without DHW. - Pre-setting 4 : Boiler connection, two heating circuits with or without DHW. - Pre-setting 5 & + : not used.			
5711	S	Cooling circuit 1	Off, 4-pipe system, 2-pipe system		**Off**

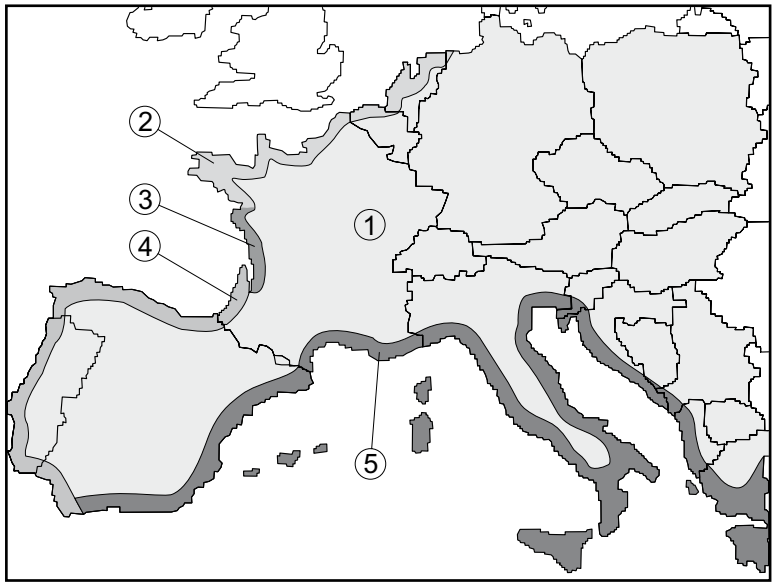

Geographical area	Water start temperature limit (line 923 & 924)
① Internal area	18°C
② Coastal area (Width 30 km)	19°C
③ Coastal area (Width 50 km)	20°C
④ Coastal area (Width 50 km)	21°C
⑤ Coastal area (Width 50 km)	22°C

figure 7 -
Water flow temperature with heating floor

The water temperature must be restricted to a value set according to the geographical area. Setting to the lowest temperatures runs the risk of causing condensation on the floor, together with all the other risks this may engender.

If the limit temperatures are not observed, the manufacturer may not be held responsible for any physical injuries or damage to equipment that may be caused.

1.5 Quick start-up

- Select the "AUTO" heating mode (**1**).
- Select the DHW mode (**2**) (If the installation is fitted with a DHW tank).
- Choose "Specialist" level.
- Choose menu "Configuration" (ligne 5700)
  Pre-setting 1, 2, 3 or 4.
- Set the parameter 5711 (Cooling circuit 1) to "2-pipe system".
- Set the parameter 901 (Operating mode) to "Automatic"
  or
  Select cooling mode (**3**).

Remark: After configuring any new setting (line 5700), you must reactivate Cooling mode (5711).

Only the temperature indicated by the room sensor circuit 1 (mixed) is taken into account for the cooling comfort temperature.

The settings of the cooling comfort target temperature (parameter 902) can ONLY be carried out on the heat pump (user interface).

☞ **Do not use the room sensor to change the cooling comfort target temperature.**

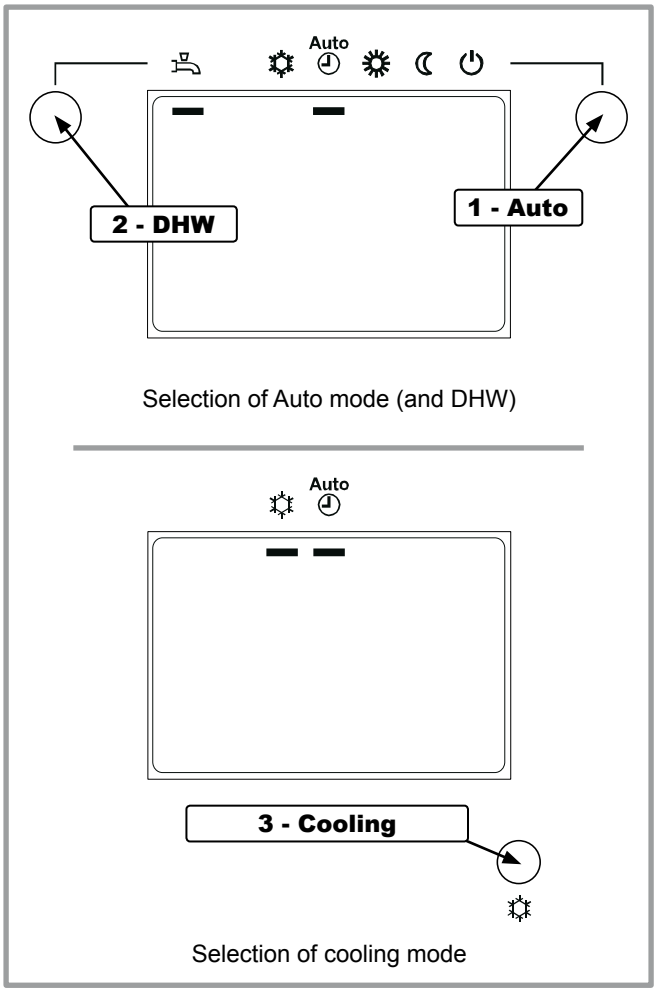

figure 8 - User interface or Room control unit

1.6 Parameters Settings depending on the installation

The parameter settings must be adapted to suit the heating-cooling emitters to avoid any inconvenient effects from condensation or temperature fluctuations (see table).

Settings for the parameters depending on the installation

Line	1 PCR (1)	1 VC	2 PCR	1 PCR (3) 1 VC	1 PCR (1+3) 1 Rad	1 VC (3) 1 Rad	2 VC
5700	1	1	2	2	2	2	2
902	24°C	24°C	24°C	24°C	24°C	24°C	24°C
908	20°C	16°C	20°C	20°C	20°C	16°C	16°C
909	16°C	6°C	16°C	16°C	16°C	6°C	6°C
923	18°C	10°C	18°C	18°C	18°C	10°C	10°C
924	18°C	10°C	18°C	18°C	18°C	10°C	10°C
938	0°C	0°C	0°C	8°C	0°C	0°C	0°C
963	No	No	Yes (2)	Yes (2)	No	No	Yes (2)

PCR = Heating-cooling floor. **VC** = Fan convector. **Rad** = Radiator.

(1) Default values.

(2) In the case of 2 heating circuits, if one of these is composed of radiators:
set parameter 963 to "No" to avoid condensation forming on the radiators.

(3) Reminder: In the case of 2 heating circuits, it is the heating-cooling floor circuit (or VC) that contains the mixing valve.

2 Spare parts

When ordering spare parts, specify the appliance type and serial number, the name of the part and the part number.

Nr	Code	Designation ..... Type	Qty
1	109576	Bundle	01
2	140638	Insulation	2,80 m
3	140637	Insulation nipple	02
4	140639	Insulation nipple	02

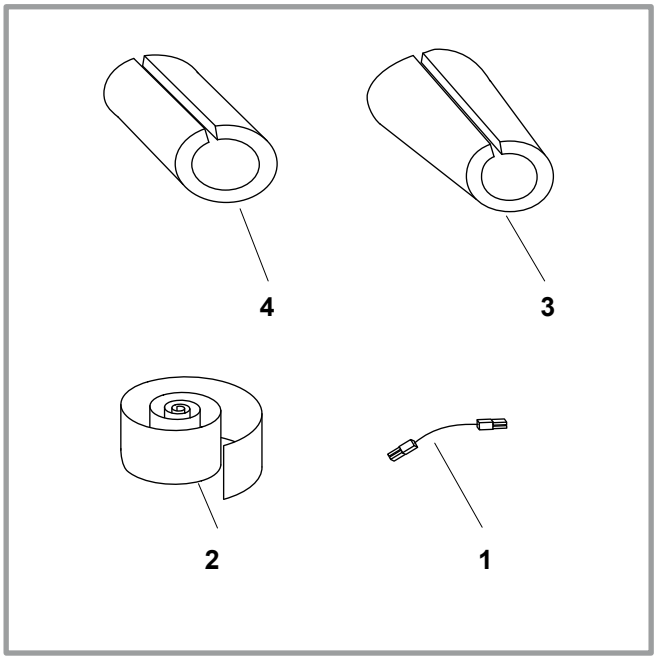

figure 9 - Spare parts Cooling kit

Complies with:
- Low voltage directive 2006/95/EC, under standard EN 60335-1.
- Electromagnetic compatibility Diretive 2004/108/EC.

This appliance is marked with this symbol. This means that electrical and electronic products shall not be mixed with general household waste.
European Community countries(*), Norway, Iceland and Liechtenstein should have a dedicated collection system for these products.
Do not try to dismantle the system yourself as this could have harmful effects on your health and on the environment.
The dismantling and treatment of refrigerant, oil and other parts must be done by a qualified installer in accordance with relevant local and national regulations.
This appliance must be treated at a specialized treatment facility for re-use, recycling and other forms of recovery and shall not be disposed of in the municipal waste stream.
Please contact the installer or local authority for more information.
* subject to the national law of each member state

Date of installation :

Contact of your heating technician or your after-sales service.

Subject to modifications without notice. Non contractual document.